DATE	DRN
07/22/11	LKI

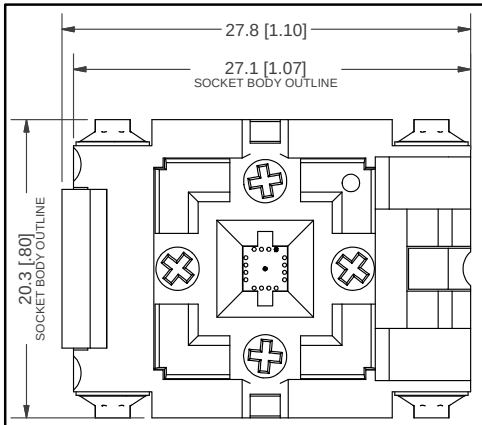

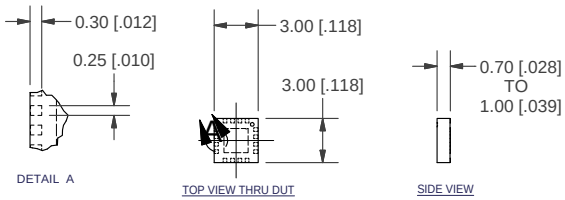

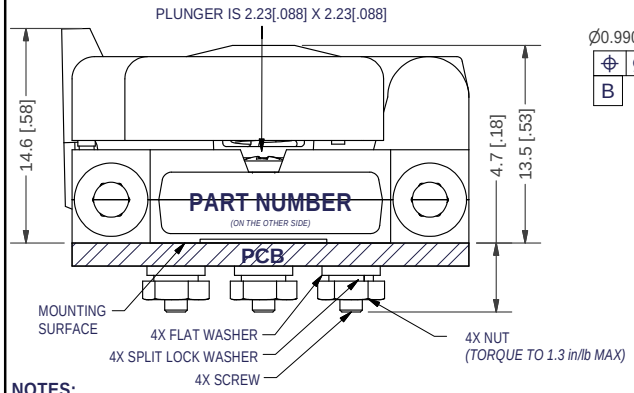

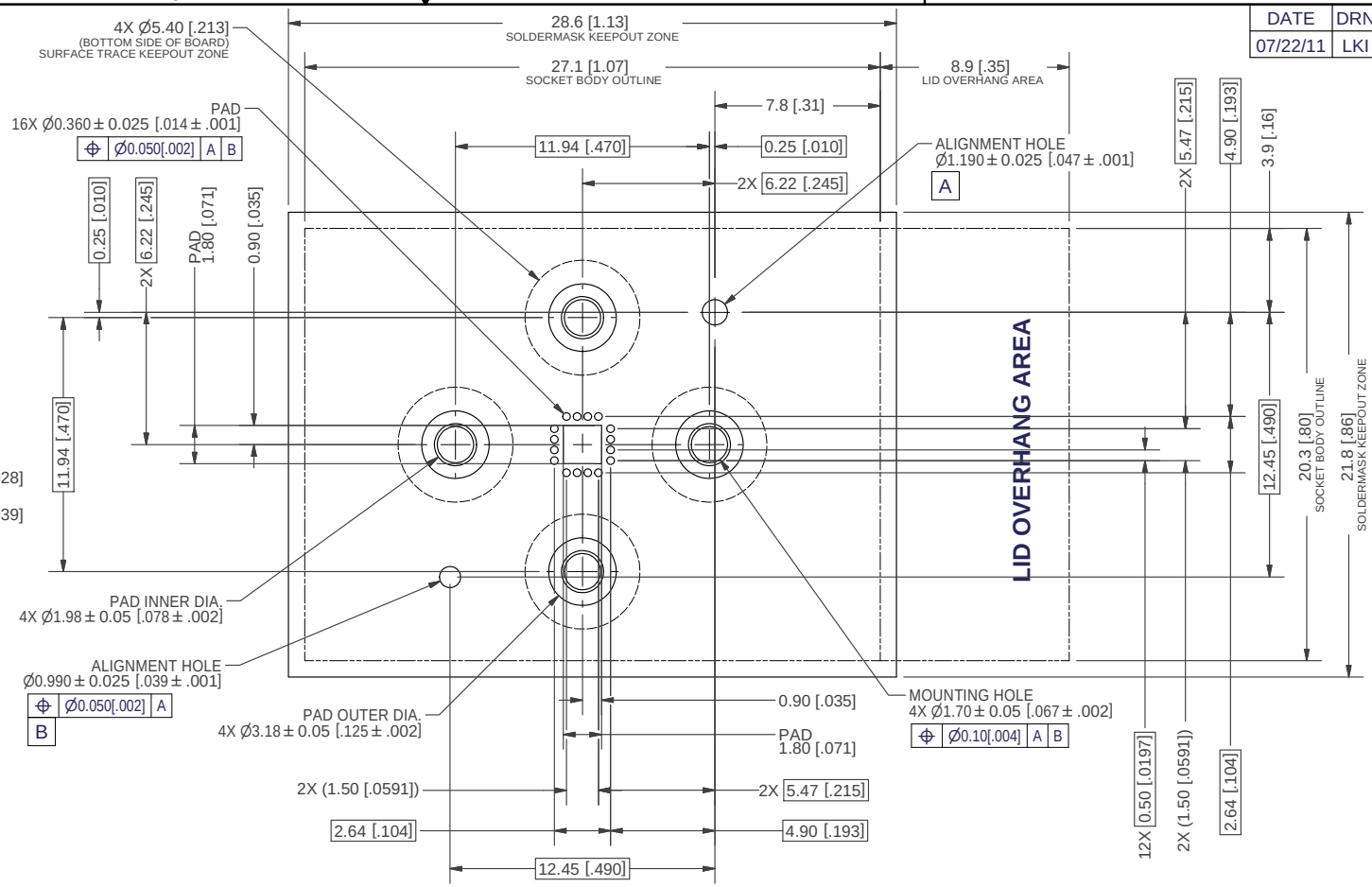

FOOTPRINT AS VIEWED FROM TOP OF SOCKET

NOTES:
1. SUGGESTED PAD PLATING: 30µin HARD Au OVER 300µin Ni OVER 1oz Cu.
2. ALL Au PADS SHOULD BE SAME HEIGHT.

THIS DRAWING IS SUBJECT TO CHANGE WITHOUT NOTICE. PLEASE REQUEST A CURRENT DRAWING WHEN LAYING OUT BOARDS.

UNLESS OTHERWISE SPECIFIED

DIMENSIONS APPLY AFTER PLATING

INVENTOR CREATED FILE

PROPRIETARY INFORMATION
THIS DRAWING AND SUPPORTING CAD DATA IS PROPERTY OF PLASTRONICS SOCKET COMPANY

LINEAR DIMENSIONS
.XX [.XXX] = ±0.076 [.003]
.X [.XX] = ±0.25 [.01]

FEATURES: A
= H-PIN CONTACT (H038LL1A)
= COMPRESSION MOUNT

INTERPRET THIS DRAWING USING ASME Y14.5M-1994

DRN LKI	6/1/2010	
CHK		
ENGR		
MFG		
UNITS	mm [inch]	
SCALE NONE	SIZE B	

PLASTRONICS
2601 Texas Drive
Irving, TX 75062

TITLE
QFN HPIN SOCKET, 3x3mm, 0.50mm PITCH, 16+1 HPIN CONTACTS, COMPRESSION MOUNT

SOCKET PART NO
16QH50A13030

DWG NO S16QH50A13030 SHEET 1 OF 1